READ ALL INSTRUCTIONS AND WARNINGS BEFORE PROCEEDING

CAUTION

DO NOT EXCEED MAXIMUM WEIGHT RATING.
Maximum Ceiling Fan = 70 lbs.
Maximum Light Fixture = 200 lbs.
IF BOXES ARE USED WITH A BAR HANGER THAT HAS A LOWER LOAD RATING, DO NOT EXCEED THE LOWER RATING.

INSTALL THIS OUTLET BOX AND EITHER CEILING FAN OR LIGHT FIXTURE ONLY IN ACCORDANCE WITH APPLICABLE NATIONAL AND LOCAL BUILDING AND ELECTRICAL CODES.

GROUNDING OF THIS OUTLET BOX MUST COMPLY WITH NATIONAL AND LOCAL ELECTRICAL CODES.

USE THE GREEN GROUND SCREW PROVIDED.

CAUTION

TO PREVENT INJURY, ELECTRICAL BOX MUST BE SECURELY MOUNTED IN ACCORDANCE WITH THESE INSTRUCTIONS BEFORE MOUNTING OR CONNECTING A CEILING FAN OR FIXTURE.

AFTER INSTALLATION OF THE ELECTRICAL BOX, BE SURE TO FOLLOW ALL MOUNTING INSTRUCTIONS PROVIDED WITH THE CEILING FAN OR LIGHT FIXTURE. **CONSULT A QUALIFIED ELECTRICIAN IF YOU HAVE ANY QUESTIONS.**

INSTALLATION INSTRUCTIONS

Catalog Numbers: 56111 CFB, 54151 CFB, 54171 CFB and 54171 FCFB

WARNING

DISCONNECT THE ELECTRICAL CIRCUIT SUPPLYING POWER TO THE OUTLET BOX.

1) Locate box on ceiling joist or cross-member making sure the face of the outlet box is flush with the finished ceiling (see Figure 2).
2) Align edges of the joist or cross-member between dotted lines on template (see Figure 1). Center line on template is center line of box.
3) Using the drill spots indicated on the template, drill (2) 5/32" diameter pilot holes 1-1/4" deep.
4) Mount box securely to joist or cross-member using 1/4" lag screws provided. **Use these screws (2) only!**
5) Install fan or fixture according to instructions provided with respective product. Use **only** supplied (2) #10-32 gold colored mounting screws with lock washers for end of screw when installing the fan or fixture. Torque screws to 35 in.-lbs.

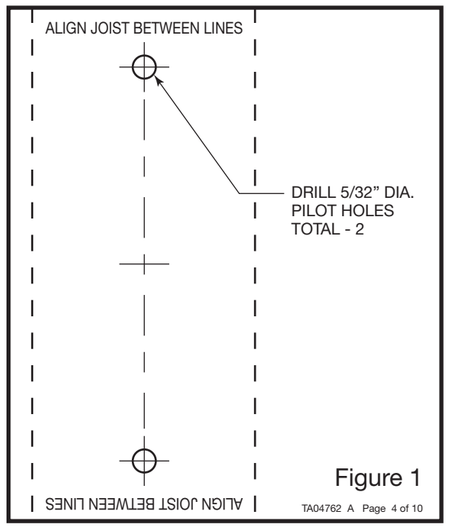

Figure 1

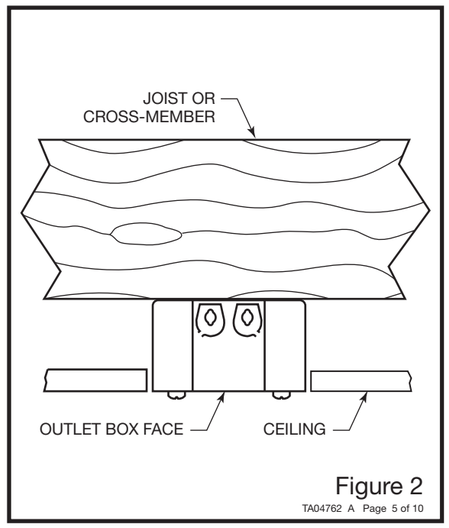

Figure 2

INSTALLATION INSTRUCTIONS FOR ELECTRICAL CONNECTORS

(Catalog Number: 56111 CFB)

WARNING

DISCONNECT THE ELECTRICAL CIRCUIT SUPPLYING POWER TO THE OUTLET BOX.

1) Remove desired knockout in box.
2) Snap the provided connector into the knockout.
3) Slip the unstripped wire though the connector into the box and pull back to lock.

NOTE: The electrical connector is intended for use with one of the following sizes of nonmetallic sheathed cable.:

No. 14-2 with ground
No. 12-2 with ground
No. 10-2 with ground

INSTALLATION INSTRUCTIONS

Catalog Number: 54171 FCFB

WARNING

DISCONNECT THE ELECTRICAL CIRCUIT SUPPLYING POWER TO THE OUTLET BOX.

1) Locate box bracket on side of ceiling joist or cross-member making sure the face of the outlet box is flush with the finished ceiling (see Figure 3).
2) Using the holes in the bracket as a template, drill (4) 5/32" diameter pilot holes 3/4" deep.
3) Mount box securely to joist or cross-member using (4) 1/4" lag screws provided. **Use these screws only!**
4) Install fan or fixture according to instructions provided with respective product. Use **only** supplied (2) #10-32 gold colored mounting screws with lock washers for end of screw when installing the fan or fixture. Torque screws to 35 in.-lbs.

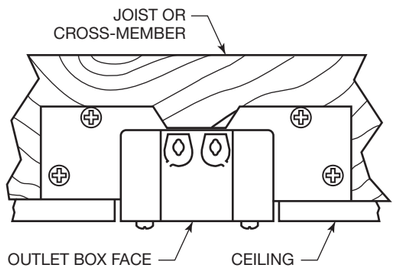

Figure 3

NOTES:

WARRANTY: Thomas & Betts sells this product with the understanding that the user will perform all necessary tests to determine the suitability of this product for the user's intended application. Thomas & Betts warrants that this product will be free from defects in materials or workmanship for a period of two (2) years following the date of purchase. Upon prompt notification of any warranted defect, Thomas & Betts will, at its option, repair or replace the defective product. Misuse, misapplication or modification of Thomas & Betts Products immediately voids all warranties.

Limitations and Exclusions: **THE ABOVE WARRANTY IS THE SOLE WARRANTY CONCERNING THIS PRODUCT, AND IS IN LIEU OF ALL OTHER WARRANTIES EXPRESS OR IMPLIED, INCLUDING BUT NOT LIMITED TO ANY IMPLIED WARRANTY OF MERCHANTABILITY OR FITNESS FOR A PARTICULAR PURPOSE, WHICH ARE SPECIFICALLY DISCLAIMED. LIABILITY FOR BREACH OF THE ABOVE WARRANTY IS LIMITED TO COST OF REPAIR OR REPLACEMENT OF THE PRODUCT, AND UNDER NO CIRCUMSTANCES WILL THOMAS & BETTS BE LIABLE FOR ANY INDIRECT, SPECIAL, INCIDENTAL OR CONSEQUENTIAL DAMAGES.**

Thomas & Betts Corporation
Memphis, Tennessee
www.tnb.com

© 2013 Thomas & Betts. All Rights Reserved.

Steel City®

Ceiling Fan and Light Fixture Outlet Box

Installation Instructions

Thomas&Betts
A Member of the ABB Group